CBA5 COWBELL ATTACHMENT

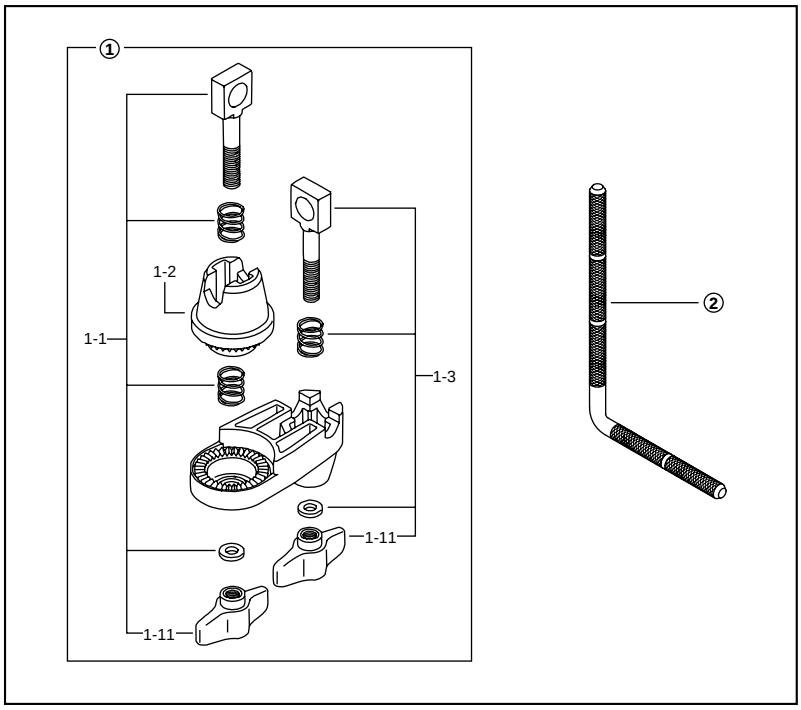

①	**MC5**	**Compact-clamp**
1-1	EBA8WN8T	Bolt, springs, washer & nut assembly
1-11	WN8P	T-nut (M8, 2pcs/pack)
1-2	EHZN2	Boom tilter casting
1-3	EBA8WN8W	Bolt, spring, washer & nut assembly
②	**LCB**	**L-rod for cowbell**